A
Real-Time Research Project Report
On

AUTOMATED CONTROL SYSTEM FOR AIR POLLUTION DETECTION IN VEHICLES

(Submitted in partial fulfillment of the requirements for the award of Degree)

BACHELOR OF TECHNOLOGY
In
COMPUTER SCIENCE AND ENGINEERING
By

K.AKANKSHA(247R1A05V1)
K. KARTHIK(257R5A0531)
Under the Guidance of
B. POOJA
(Assistant Professor)

DEPARTMENT OF COMPUTER SCIENCE AND ENGINEERING

CMR TECHNICAL CAMPUS

UGC AUTONOMOUS

(Accredited by NAAC, NBA, Permanently Affiliated to JNTUH, Approved by AICTE, New Delhi)
Recognized Under Section 2(f) & 12(B) of the UGCAct.1956, Kandlakoya (V), Medchal Road, Hyderabad-501

DEPARTMENT OF COMPUTER SCIENCE AND ENGINEERING

CERTIFICATE

This is to certify that the project entitled "**AUTOMATED CONTROL SYSTEM FOR AIR POLLUTION DETECTION IN VEHICLES**" being submitted by K.AKANKSAH(247R1A05V1), **K. KARTHIK (257R5A0531)** in partial fulfillment of the requirements for the award of the degree of B. Tech in Computer Science and Engineering to the Jawaharlal Nehru Technological University Hyderabad, during the year 2025-26.

The results embodied in this thesis have not been submitted to any other University or Institute for the award of any degree or diploma.

B.POOJA
Assistent Professor
INTERNAL GUIDE

Dr. Nuthanakanti Bhaskar
HOD-CSE(DS)

Dr. A. Raji Reddy
Director

ACKNOWLEDGEMENT

We take this opportunity to express our gratitude to the people who have been instrumental in the successful completion of this project, we take this opportunity to express our profound gratitude and deep regard to our guide **Mrs. B.POOJA** Assistant Professor for her exemplary guidance, monitoring and constant encouragement throughout the project work. The blessing, help and guidance given by him shall carry us a long way in the journey of life on which we are about to embark. We take this opportunity to extend our heartfelt appreciation to the Project Review Committee (PRC) Coordinators—**Dr. J. Narasimhara, Mrs. V. Neeraja, Mrs. G.Swarnalatha and Mrs. L. Swathi**—for their unwavering support, insightful guidance, and valuable inputs, which played a crucial role in steering this project through its various stages.

Our sincere appreciation also goes to **Dr. Nuthanakanti Bhaskar**, Head, for his encouragement and continuous support in ensuring the successful completion of our project.

We are deeply grateful to **Dr. A. Raji Reddy**, Director, for his cooperation throughout the course of this project. Additionally, we extend our profound gratitude to Sri. **Ch. Gopal Reddy**, Chairman, Smt. **C. Vasantha Latha**, Secretary and Sri. **C. Abhinav Reddy**, Vice-Chairman, for fostering an excellent infrastructure and a conducive learning environment that greatly contributed to our progress.

We also acknowledge and appreciate the guidance and assistance provided by the faculty and staff of **CMR Technical Campus**, whose contributions have been invaluable in bringing this project to fruition.Lastly, we sincerely thank our families for their unwavering support and encouragement. We also extend our gratitude to the teaching and non-teaching staff of CMR Technical Campus for their guidance and assistance. Their contributions, along with the support of everyone who helped directly or indirectly, have been invaluable in the successful completion of this project.

K.AKANKSHA(247R1A05V1)

K.KARTHIK(257R5A0531)

VISION AND MISSION

INSTITUTE VISION:

To Impart quality education in serene atmosphere thus strive for excellence in Technology and Research.

INSTITUTE MISSION:

1. To create state of art facilities for effective Teaching- Learning Process.
2. Pursue and Disseminate Knowledge based research to meet the needs of Industry & Society.
3. Infuse Professional, Ethical and Societal values among Learning Community.

DEPARTMENT VISION:

To provide quality education and a conducive learning environment in computer engineering that foster critical thinking, creativity, and practical problem-solving skills.

DEPARTMENT MISSION:

1. To educate the students in fundamental principles of computing and induce the skills needed to solve practical problems.
2. To provide State-of-the-art computing laboratory facilities to promote industry institute interaction to enhance students' practical knowledge.
3. To inculcate self-learning abilities, team spirit, and professional ethics among the students to serve society.

ABSTRACT

This project is titled “Automated Control System for Air Pollution Detection in Vehicles”. Vehicular emissions remain a primary contributor to urban air pollution, necessitating automated detection and control mechanisms. This system employs sensors integrated with IoT-enabled microcontrollers, such as Arduino or ESP32, to continuously measure pollutants like CO, NOx, and particulate matter from vehicle exhausts. Data is processed locally and transmitted to a central cloud platform for analysis, enabling immediate alerts, engine throttling, or regulatory reporting to reduce environmental impact.To further enhance efficiency, the system can incorporate machine learning algorithms that analyze historical emission patterns to predict potential faults or excessive emissions before they occur. Integration with GPS modules allows real-time tracking of high-emission vehicles, enabling authorities to identify pollution hotspots and enforce region-specific regulations. Additionally, the system can be connected to mobile applications that notify vehicle owners about their emission levels, maintenance requirements, and compliance status.

The Automated Control System for Air Pollution Detection in Vehicles leverages gas sensors to measure pollutant concentrations directly from the vehicle exhaust. A microcontroller processes the sensor data and compares it with predefined threshold values based on environmental standards. When pollution exceeds permissible limits, the system can trigger alerts, notify authorities, or initiate control actions such as limiting engine performance or prompting maintenance.By integrating wireless communication modules, the system enables real-time data transmission to cloud platforms for analysis and record keeping. This approach supports smart transportation initiatives and provides authorities with accurate emission data for better policy enforcement. Overall, the system represents a significant step toward sustainable mobility, environmental protection, and improved public health through intelligent automation.

LIST OF FIGURES

FIGURE NO	FIGURE NAME	PAGE NO
Figure 3.1	Project Architecture of Automated Control System for Air Pollution Detection in Vehicles.	23
Figure 3.3	Data flow diagram for Automated Vehicle Emission Control System	25
Figure 5.1	GUI/Main Interface of an Advanced IoT-Based Remote Automated control system for air pollution detection in vehicles.	43
Figure 5.2	Graphical representation of temperature and humidity in an advanced IoT-based, Automated control system for air pollution in vehicles	44
Figure 5.3	Loaded sample image of the Advanced IoT-Based automated air pollution detection and Alarm System.	45

LIST OF TABLES

TABLE NO	TABLE NAME	PAGE NO
Table 6.2.1	System Input	51
Table 6.2.2	Classification	51

TABLE OF CONTENTS

ABSTRACT 5
LIST OF FIGURES 6
LIST OF TABLES 7
1. INTRODUCTION 9
1.1 PROJECT PURPOSE 10
1.2 PROJECT FEATURES 11
2. LITERATURE SURVEY 12
2.1 REVIEW OF RELATED WORK 14
2.2 DEFINITION OF PROBLEM STATEMENT 16
2.3 EXISTING SYSTEM 17
2.4 PROPOSED SYSTEM 18
2.5 OBJECTIVES 20
2.6 HARDWARE & SOFTWARE REQUIREMENTS 21
2.6.1 HARDWARE REQUIREMENTS 21
2.6.2 SOFTWARE REQUIREMENTS 21
3. SYSTEM ARCHITECTURE & DESIGN 22
3.1 PROJECT ARCHITECTURE 23
3.2 DESCRIPTION 24
3.3 DATA FLOW DIAGRAM 25
4. IMPLEMENTATION 26
4.1 ALGORITHMS USED 27
4.2 SAMPLE CODE 31
5. RESULTS & DISCUSSION 41
6. VALIDATION 48
6.1 INTRODUCTION 49
6.2 TEST CASES 50
6.2.1 UPLOADING DATASET 50
6.2.2 CLASSIFICATION 50
7. CONCLUSION & FUTURE ASPECTS 51
7.1 PROJECT CONCLUSION 52
7.2 FUTURE ASPECTS 53
8. BIBLIOGRAPHY 54
8.1 REFERENCES 55

1.INTRODUCTION

1.INTRODUCTION

Air pollution has emerged as one of the most serious environmental challenges affecting human health and ecological balance. Among various pollution sources, vehicular emissions play a dominant role, particularly in densely populated cities. Exhaust gases released from automobiles contain toxic pollutants such as carbon monoxide, nitrogen oxides, sulfur dioxide, and particulate matter, which contribute to respiratory diseases, global warming, and smog formation. Despite strict emission norms, effective enforcement remains difficult due to limitations of existing monitoring systems.

Traditional vehicle emission testing is typically conducted at fixed intervals in authorized centers, which does not reflect the actual emission levels during daily vehicle operation. Vehicles that pass emission tests may later become highly polluting due to poor maintenance or component degradation. As a result, real-time pollution monitoring becomes essential to address this gap. Advances in embedded systems, sensors, and Internet of Things (IoT) technologies have made it possible to design intelligent systems capable of continuous monitoring and automated control.

1.1 PROJECT PURPOSE

The purpose of the Automated Control System for Air Pollution Detection in Vehicles is to provide a smart and efficient solution for continuously monitoring and controlling vehicle emissions in real time. The system is designed to detect harmful gases such as carbon monoxide (CO), nitrogen oxides (NOx), and other pollutants directly from the vehicle exhaust using gas sensors. Unlike conventional methods that rely on periodic inspection at pollution testing centers, this project ensures continuous monitoring during actual vehicle operation, thereby increasing accuracy and reliability.

The system not only detects pollution levels but also compares them with predefined threshold limits to identify excessive emissions. When the pollution level exceeds the permissible limit, the system automatically generates alerts through a buzzer and display, informing the driver about the condition. It can also initiate control actions such as reducing engine performance or activating exhaust control mechanisms to minimize pollution. This helps in preventing further environmental damage and encourages timely maintenance of vehicles.

1.2 PROJECT FEATURES

The Automated Control System for Air Pollution Detection in Vehicles includes several important features that make it efficient and user-friendly. The system continuously monitors pollution levels in real time using gas sensors such as MQ sensors to detect harmful gases like carbon monoxide and smoke from vehicle exhaust. A microcontroller, such as Arduino, processes the sensor data and compares it with predefined threshold values to identify excessive emissions. When the pollution level exceeds the limit, the system automatically activates control actions like turning on a fan or triggering alerts. It also includes an alert system using a buzzer and LED to notify the driver immediately. An LCD display is used to show real-time pollution values and system status. The project is designed using low-cost hardware components, making it affordable, compact, and easy to install in different vehicles.

When the detected pollution exceeds the permissible level, the system automatically responds by activating control mechanisms such as turning on a fan or exhaust system to reduce the concentration of harmful gases. At the same time, it alerts the driver through a buzzer and visual indicators like LEDs or an LCD display, ensuring immediate awareness of the issue. The LCD also provides real-time information about gas levels and system status, making it easy for the user to monitor performance.

Additionally, the system reduces the need for manual inspection by automating the entire process, thereby improving accuracy and reliability. It is built using low-cost and easily available components, making it economical and suitable for widespread use. The compact and portable design allows easy installation in different types of vehicles. Furthermore, the system can be expanded in the future by integrating IoT technology for remote monitoring and data analysis, enhancing its functionality and effectiveness in controlling air pollution.

2.LITERATURE SURVEY

2.LITERATURE SURVEY

The literature review of the Automated Control System for Air Pollution Detection in Vehicles focuses on various existing techniques and technologies developed to monitor and control vehicular emissions. Many researchers have emphasized the importance of real-time monitoring systems over traditional periodic testing methods, as they provide continuous and accurate data about pollution levels during actual vehicle operation. Several studies have implemented gas sensors such as MQ series sensors to detect pollutants like carbon monoxide (CO), nitrogen oxides (NOx), and hydrocarbons, integrating them with microcontrollers like ATmega and Arduino for data processing and control.

In earlier works, systems were designed to simply detect smoke levels and alert the driver when pollution exceeded safe limits. However, more advanced approaches introduced automatic control mechanisms, where the system could take actions such as reducing engine speed or shutting down the engine to prevent excessive emissions. Some research also incorporated communication technologies like GSM and GPS to send alerts to vehicle owners and authorities, as well as to provide location tracking for maintenance support.

Further studies explored the use of multiple sensors to improve detection accuracy and reliability, enabling the monitoring of different types of gases simultaneously. Survey-based research has highlighted the advantages of combining embedded systems with wireless communication for large-scale environmental monitoring. In recent years, IoT-based solutions have gained popularity, allowing real-time data transmission to cloud platforms for storage, analysis, and remote access. These systems support predictive maintenance and help authorities enforce emission regulations more effectively.

Overall, the existing literature demonstrates that the integration of sensors, embedded systems, and communication technologies can significantly improve the efficiency of air pollution monitoring in vehicles. These developments provide a strong foundation for the proposed project, which aims to offer a low-cost, automated, and real-time solution for reducing vehicular pollution and promoting environmental sustainability.

Moreover, modern research has also explored the use of intelligent algorithms and machine learning techniques to predict pollution trends and identify potential faults in vehicle engines before they lead to excessive emissions. These innovations improve system efficiency and support preventive maintenance.

Overall, the literature suggests that integrating gas sensors, microcontrollers, communication modules, and intelligent technologies provides a comprehensive solution for real-time emission monitoring and control. These developments form the foundation for the proposed system, which aims to combine accuracy, automation, and efficiency to reduce air pollution and promote sustainable transportation.

Recent studies have also focused on improving the reliability and efficiency of air pollution detection systems by enhancing sensor calibration techniques and reducing environmental interference. Researchers have explored advanced signal processing methods to filter noise caused by temperature, humidity, and external atmospheric conditions, which often affect gas sensor accuracy. Some works have proposed hybrid sensor systems that combine different types of sensors to improve detection precision and ensure consistent performance under varying conditions. These improvements help in achieving more accurate and stable readings, making the system more dependable for real-time applications in vehicles.

Furthermore, emerging research trends emphasize the integration of smart technologies and automation in vehicular pollution control systems. Advanced systems are being developed to connect with smart city infrastructure, enabling centralized monitoring of vehicle emissions and better regulatory enforcement. Some approaches also include data analytics and cloud-based platforms to analyze long-term pollution data, identify patterns, and support decision-making for environmental policies. These developments highlight the growing importance of intelligent, connected, and scalable solutions in addressing the challenges of vehicular air pollution, paving the way for more sustainable and eco-friendly transportation systems.

2.1 REVIEW OF RELATED WORK

The review of related work shows that many researchers have developed air pollution monitoring systems using MQ gas sensors and microcontrollers like Arduino. These systems detect harmful gases such as CO, NOx, and hydrocarbons and display data using an LCD. Most projects focus on real-time monitoring and alert systems using buzzer or LED when pollution exceeds a threshold level.

2.1.1 Traditional Content Moderation Approaches

Traditional content moderation approaches rely on a combination of human effort and basic automated techniques to manage and filter inappropriate content. One of the most common methods is manual moderation, where human moderators review and decide whether content should be

approved or removed based on guidelines. In addition to this, keyword-based filtering is widely used, where specific words or phrases are identified to block harmful or offensive content. Rule-based systems also play a role by applying predefined conditions to detect spam, abusive language, or policy violations. Another common approach is the use of blacklist and whitelist methods, which allow or restrict content based on approved or banned lists. User reporting systems further support moderation by enabling users to flag inappropriate content for review. These systems can operate through pre-moderation, where content is checked before publication, or post-moderation, where content is reviewed after being published. Although these traditional methods are simple and widely used, they often face challenges in handling large volumes of data and understanding context accurately.

2.1.2 Machine Learning-Based Approaches

A machine learning-based approach to content moderation uses algorithms to automatically detect harmful or inappropriate content. It learns patterns from large datasets instead of relying only on fixed rules or keywords. Techniques like Natural Language Processing (NLP) help understand the meaning and context of text.

It can classify content such as spam, hate speech, or abusive language. These systems improve over time by learning from new data and user feedback. They can process large volumes of content quickly and in real time.

2.1.3 Deep Learning-Based Approaches

A deep learning-based approach to content moderation uses advanced neural networks to analyze and filter content automatically. It can process complex data such as text, images, audio, and videos with high accuracy. Techniques like Convolutional Neural Networks (CNN) and Recurrent Neural Networks (RNN) are commonly used.

It understands context, tone, and patterns better than traditional machine learning methods. Deep learning models can detect harmful content like hate speech, violence, or explicit material.

They improve performance by training on large datasets and learning complex features.

However, they require high computational power, large data, and careful tuning to avoid errors.

2.1.4 Recent Advances: Attention Mechanisms & Transformer-Based Models

Recent advances in content moderation and natural language processing have been significantly influenced by attention mechanisms and transformer-based models. Attention mechanisms allow models to focus on the most important parts of input data, improving the understanding of context and relationships between words. Transformer-based models, such as BERT and GPT, use this mechanism to process entire sequences of data simultaneously rather than sequentially, resulting in faster and more accurate predictions. These models have greatly enhanced the ability to detect complex patterns, sarcasm, and contextual meaning in content. As a result, they provide more efficient and scalable solutions for analyzing large volumes of text, images, and other multimedia data in real time.

2.1.5 Comparison with the Proposed Approach

The proposed approach offers significant improvements when compared to traditional, machine learning, and deep learning-based methods. Traditional approaches rely on manual moderation and rule-based systems, which are simple but lack the ability to understand context and handle large-scale data efficiently. Machine learning methods improve automation and can classify content based on learned patterns, but they still depend heavily on feature selection and may struggle with complex contextual understanding. Deep learning approaches further enhance performance by automatically learning features and handling complex data such as text and images, but they often require large datasets and high computational resources.

In comparison, the proposed approach, which incorporates advanced techniques like attention mechanisms and transformer-based models, provides better context understanding, higher accuracy, and faster processing. It can analyze relationships between words more effectively, detect subtle meanings such as sarcasm or intent, and handle large volumes of data in real time. Additionally, it reduces human effort while improving scalability and adaptability, making it more suitable for modern, intelligent content moderation systems.

2.2 DEFINITION OF PROBLEM STATEMENT

Rapid growth in vehicular population has become one of the major contributors to air pollution, especially in urban areas. Conventional pollution monitoring methods rely on periodic manual inspections at authorized centers, which fail to detect excessive emissions during real-time vehicle operation. Many vehicles continue to emit harmful gases such as carbon monoxide (CO), nitrogen oxides (NOx), and hydrocarbons due to poor maintenance, engine malfunction, or intentional bypassing of

regulations. This leads to severe environmental degradation and health hazards. Therefore, there is a critical need for an automated, real-time air pollution detection and control system integrated within vehicles to continuously monitor emissions and take necessary actions when pollution levels exceed standard limits.

2.3 EXISTING SYSTEM

Traditional vehicle emission monitoring systems rely heavily on periodic manual inspections conducted at authorized service stations or regulatory testing centers. These inspections typically use portable gas analyzers to measure exhaust emissions such as carbon monoxide (CO), hydrocarbons (HC), and nitrogen oxides (NOx). However, these measurements are taken only at specific intervals and under controlled conditions, which do not accurately reflect a vehicle's emission behavior during real-world driving scenarios.Such methods suffer from several limitations, including low monitoring frequency, susceptibility to human error, and lack of continuous data collection. Since testing is not conducted in real time, significant fluctuations in emission levels caused by varying driving conditions—such as acceleration, load, traffic congestion, and engine wear—often go undetected. As a result, vehicles that pass these periodic checks may still emit excessive pollutants during everyday use.

Additionally, compliance with emission regulations largely depends on the vehicle owner's initiative to undergo testing, leading to irregular participation and enforcement challenges. There is also minimal integration of these monitoring systems with in-vehicle electronics, smart sensors, or centralized traffic management infrastructure. This lack of connectivity prevents authorities from tracking high-emission vehicles dynamically or taking timely corrective action.

Consequently, many high-polluting vehicles continue to operate on roads unchecked between inspection cycles, contributing significantly to environmental pollution and public health risks. This highlights the need for a more advanced, automated, and real-time emission monitoring system that can overcome the shortcomings of traditional approaches.

2.3.1 Limitations of Existing System

- **Lack of Real-Time Monitoring:**
  The existing system does not monitor vehicle emissions continuously. Pollution levels are checked only during inspection, so actual emissions during daily driving are unknown.

- **Periodic and Infrequent Testing:**
  Emission testing is conducted at fixed intervals (e.g., every 6 months), which means vehicles may pollute excessively between tests without detection.
- **Dependence on Manual Inspection:**
  The system relies heavily on human involvement, which can lead to errors, incorrect readings, or negligence during testing.

- **Possibility of Manipulation:**
  Vehicle owners may temporarily fix issues or tune engines only for testing purposes, allowing them to pass emission tests while still polluting later.
- **No Continuous Emission Tracking:**
  There is no mechanism to track emission levels over time, making it difficult to analyze pollution patterns or identify long-term issues.
- **Delayed Detection of Problems:**
  Mechanical faults, poor fuel combustion, or sensor failures are not identified immediately, leading to prolonged pollution.
- **Absence of Automatic Control Mechanism:**
  Existing systems only detect pollution but do not take corrective actions like engine control, alerts, or shutdown.
- **Limited Monitoring by Authorities:**
  Government agencies cannot monitor all vehicles in real time, reducing the effectiveness of pollution control enforcement.
- **No Integration with Smart Technologies:**
  Traditional systems are not connected to IoT, cloud, or smart city infrastructure, limiting data analysis and centralized monitoring.

2.4 PROPOSED SYSTEM

The proposed system is an advanced, automated solution designed to continuously monitor and control vehicular emissions using modern embedded and IoT technologies. It incorporates on-board air quality sensors that are directly installed in the vehicle's exhaust system to measure pollutants such as carbon monoxide (CO), nitrogen oxides (NOx), and hydrocarbons in real time.These sensors are interfaced with a microcontroller (such as Arduino/ATmega328), which processes the collected data and

compares it with predefined environmental threshold values. If the emission levels exceed the permissible limits, the system automatically initiates corrective actions such as reducing fuel injection, limiting engine performance, or triggering warning alerts through a buzzer or display unit.

The system also includes real-time data logging, allowing continuous recording of emission data for analysis and monitoring. With the integration of IoT technology, the collected data is transmitted to a cloud platform, where it can be stored, analyzed , and accessed remotely by users and regulatory authorities. The proposed solution improves overall accuracy and reliability compared to traditional systems by eliminating manual intervention and enabling continuous monitoring. It also supports predictive maintenance by identifying potential engine or emission-related issues early, helping vehicle owners take timely action.

2.4.1 Advantages of the Proposed System

- The system continuously monitors vehicle emissions in real time while the vehicle is running, ensuring accurate and up-to-date pollution data instead of relying on periodic checks.
- It detects excessive pollution levels immediately, allowing early identification of engine faults or emission issues before they become severe.
- The system can automatically take corrective actions such as reducing engine performance or triggering alerts when emission levels exceed permissible limits.
- It reduces the need for human intervention, minimizing errors and improving the overall reliability of the monitoring process.
- Sensors used in the system provide more precise and consistent measurements compared to traditional manual testing methods.
- With IoT connectivity, the system can send data to cloud platforms, enabling remote monitoring and analysis by users and authorities.
- It provides instant alerts through buzzer, display, or notifications, helping drivers take immediate action to control pollution.
- The system supports predictive maintenance by analyzing emission patterns and identifying potential issues in advance.
- Authorities can monitor vehicles remotely, which improves enforcement of pollution control regulations and reduces violations.
- It helps in reducing harmful emissions like carbon monoxide and nitrogen oxides, contributing to environmental protection and public heal

2.5 OBJECTIVES

- To continuously monitor the exhaust gas emissions of vehicles in real time using sensors, ensuring accurate measurement of pollutants during actual driving conditions.
- To automatically detect and compare emission levels with predefined environmental standards, identifying when pollution exceeds permissible limits without manual checking.
- To provide immediate alerts to the driver through devices like buzzer or display when harmful gases such as carbon monoxide (CO), nitrogen oxides (NOx), and hydrocarbons rise above safe levels.
- To implement automatic control actions such as reducing engine speed or controlling fuel injection in order to minimize the release of harmful emissions.
- To eliminate dependency on manual inspection systems by introducing a fully automated monitoring and control mechanism.
- To improve the accuracy, efficiency, and reliability of emission detection compared to traditional periodic testing methods.
- To enable early detection of engine faults or improper combustion, allowing timely maintenance and reducing long-term damage.

2.6 HARDWARE & SOFTWARE REQUIREMENTS

2.6.1 HARDWARE REQUIREMENTS

Hardware requirements are the physical components used to build and operate the system. They work together to detect pollution, process data, display results, and control actions in the vehicle.

- **Arduino (ATmega328)** – Controls the entire system.
- **Gas Sensor** – Detects harmful gases.
- **LCD Display** – Shows emission values.
- **Relay Module** – Controls engine operation.
- **Power Supply Unit** – Provides power to the system.
- **LED** – Indicates system status.
- **Resistors** – Controls current flow.
- **Capacitors** – Smoothens voltage.
- **Bridge Rectifier (DB107)** – Converts AC to DC.
- **Voltage Regulator (IC 7805)** – Maintains constant voltage.

2.6.2 SOFTWARE REQUIREMENTS:

Software requirements control and manage the working of the system. They help in processing data, making decisions, and controlling hardware components.

- **Arduino IDE** – Used to write, compile, and upload code to the microcontroller.
- **Embedded C Programming** – Used to develop the logic for sensor reading and control actions.
- **Serial Monitor** – Used to view real-time data from the system during testing.

3.SYSTEM ARCHITECTURE

&

DESGINE

3. SYSTEM ARCHITECTURE & DESIGN

The system consists of a gas sensor, microcontroller, display unit, relay module, and power supply. The gas sensor detects pollutants from the vehicle exhaust and sends data to the microcontroller. The microcontroller processes the data and compares it with set threshold values. If pollution exceeds the limit, it activates alerts like LED or LCD and controls the engine using a relay module.

3.1 PROJECT ARCHITECTURE

The project architecture consists of a gas sensor, microcontroller, display unit, relay module, and power supply connected in a structured manner. The gas sensor detects harmful gases from the vehicle exhaust and sends the data to the microcontroller. The microcontroller processes this data and compares it with predefined threshold values. If the pollution level exceeds the limit, it activates alert systems like LED or LCD display and triggers the relay module to control the engine operation. The power supply unit provides the required voltage to all components. Overall, the architecture ensures continuous monitoring, automatic decision-making, and control of vehicle emissions.

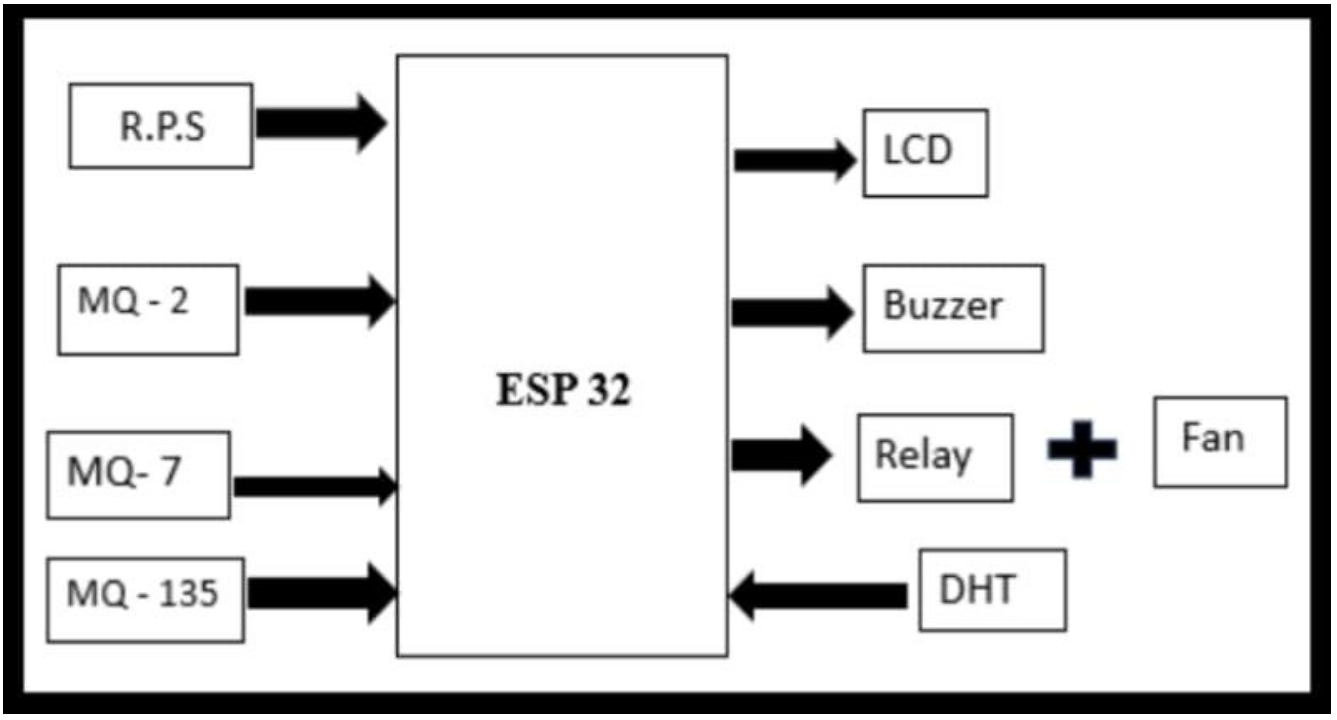

Figure 3.1: Project Architecture of Automated Control System for Air Pollution Detection in Vehicles.

3.2 DESCRIPTION

- **Sensor Unit:**

  The gas sensor is used to detect pollutants like carbon monoxide and other harmful gases from the vehicle exhaust. It continuously monitors emission levels.

- **Processing Unit:**

  The microcontroller receives data from the sensor and processes it. It compares the detected values with predefined standard limits.

- **Threshold Checking:**

  The system checks whether the emission levels are within permissible limits or exceed the threshold values.

- **Alert System:**

  If pollution exceeds the limit, the system activates alerts such as buzzer, LED, or LCD display to notify the driver.

- **Control Mechanism:**

  The relay module is triggered to take action, such as controlling or reducing engine performance to minimize emissions.

- **Power Supply:**

  A regulated power supply provides the required voltage for all components to function properly.

- **Overall Operation:**

  The system continuously monitors, processes, alerts, and controls vehicle emissions automatically without human intervention.

3.3 DATA FLOW DIAGRAM

The data flow in the system begins with the gas sensor, which collects information about harmful gases present in the vehicle exhaust. This sensor data is then transmitted to the microcontroller, where it is processed and analyzed. The microcontroller compares the received data with predefined threshold values to determine whether the pollution level is within acceptable limits or exceeds them. Based on this decision, the system performs appropriate actions. If the emission level is normal, the system continues monitoring without interruption. However, if the pollution level exceeds the set limit, the microcontroller activates output devices such as the LCD

display, LED, or buzzer to alert the user. At the same time, it triggers the relay module to control the engine operation and reduce emissions. Additionally, the data can be stored or transmitted to cloud platforms for further monitoring and analysis. This continuous flow of data ensures real-time monitoring and automatic control of vehicle pollution.

Benefits:

The system helps in reducing vehicular pollution by continuously monitoring emissions and taking automatic control actions when limits are exceeded. It improves air quality and ensures accurate detection of harmful gases. By minimizing human intervention, it increases reliability and efficiency. The system also supports timely maintenance, enhances regulatory enforcement, and reduces health risks caused by toxic emissions.

Levels of DFD:

Level 0 DFD

This is the highest level diagram. It shows the entire system as a single process and how it interacts with external entities like the user or environment.

Level 1 DFD

This level breaks the main system into smaller processes such as data collection, processing, decision-making, and output generation.

Level 2 DFD

This level provides a more detailed breakdown of Level 1 processes, showing step-by-step internal operations of each function.

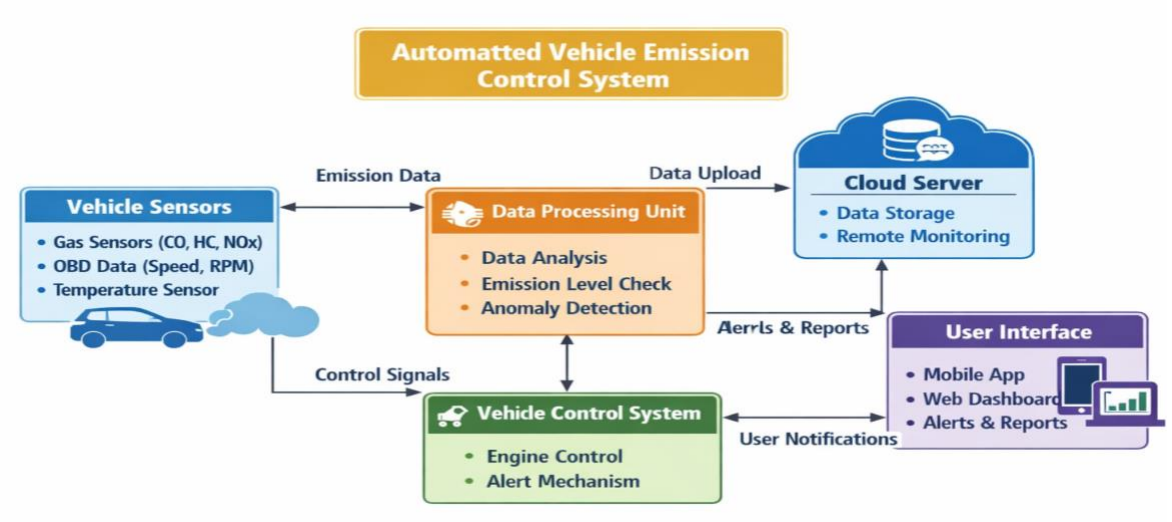

Figure 3.3 : Data flow diagram for Automated Vehicle Emission Control System

4. IMPLEMENTATION

4. IMPLEMENTATION

Implementation is the process of putting the project design into action by assembling hardware, writing programs, and making the system work in real-time. It means connecting components (Arduino, gas sensor, LCD, etc.), programming the controller, and running the system to detect and control vehicle pollution automatically.

4.1 ALGORITHMS USED

4.1.1 Threshold-Based Monitoring and Decision Algorithm

This system continuously reads the values from the temperature, humidity, MQ2, MQ7, and MQ135 sensors and compares them with predefined threshold limits. If the sensed gas levels remain within the safe range, the system indicates normal condition and continues monitoring. If any gas sensor detects pollution above the permissible limit, the controller immediately identifies it as a polluted condition, activates the alert system such as a buzzer, and updates the status on the display as well as the web server. This process is repeated continuously to ensure real-time air pollution detection, monitoring, and decision making.

Advantages of Threshold-Based Algorithm:

- Simple and easy to implement in embedded systems and microcontroller-based projects.
- Provides fast detection by comparing sensor values with predefined limits.
- Consumes less processing time and is suitable for real-time monitoring.
- Reliable for alert generation when pollution exceeds the safe threshold.

DisAdvantages of Threshold-Based Algorithm:

- Accuracy depends on threshold values; wrong limits may give incorrect results.
- Cannot handle complex pollution patterns or gradual changes effectively.
- May generate false alarms due to sensor noise or temporary fluctuations.
- Not adaptive, since fixed threshold values do not automatically adjust to changing conditions.

Rule-Based and Event-Driven Processing Algorithm

This system continuously monitors the readings from the temperature, humidity, MQ2, MQ7, and MQ135 sensors and processes them according to predefined rules. Each rule is based on whether the sensor values are within the safe limit or exceed the pollution threshold. When an abnormal condition or pollution event occurs, the system immediately responds by triggering actions such as turning ON the buzzer, displaying a warning message, and updating the data to the web server. Thus, the algorithm works based on both **fixed decision rules** and **real-time event detection**, making it effective for continuous pollution monitoring and control.

Advantages of Rule-Based and Event-Driven Approach:

- Easy to design and understand, since it works on predefined rules.
- Responds immediately whenever a pollution event is detected.
- Suitable for real-time monitoring and alert systems.
- Requires low computational power, making it ideal for microcontroller-based systems.

Disadvantages of Rule-Based and Event-Driven Approach:

- Depends on fixed rules, so it may not handle unexpected situations well.
- Needs proper rule setting, otherwise it may give wrong outputs.
- Less flexible, because modifying system behavior requires changing the rules manually.
- Cannot learn or improve automatically like intelligent or AI-based systems.

4.1.1.2 Cloud-Based Data Management and Monitoring

The proposed system uses cloud-based data management to store, access, and monitor sensor readings in real time. The values collected from the temperature, humidity, MQ2, MQ7, and MQ135 sensors are transmitted through the IoT module to an online cloud/server platform. This allows continuous recording of environmental and pollution data along with date and time information. The cloud system makes it easier to view, analyze, and monitor the vehicle's pollution status remotely, improving data accessibility, storage efficiency, and real-time decision support.

Advantages of Cloud-Based Approach:

- Enables real-time data monitoring from any location through the internet.
- Stores large amounts of sensor data safely for future analysis and reporting.
- Supports remote access and easy data sharing between users and administrators.
- Improves system scalability, allowing more sensors and devices to be connected easily.

DisAdvantages of Cloud-Based Approach:

- Requires a stable internet connection for continuous data transmission.
- May face data security and privacy issues if the cloud is not properly protected.
- Cloud service or server failure can affect monitoring and data access.
- Increases dependency on external platforms, which may involve maintenance or service costs.

4.1.1.3 Edge Computing for Local Processing

In the proposed system, edge computing is used to process sensor data locally at the device level without depending entirely on the cloud. The microcontroller collects data from the temperature, humidity, MQ2, MQ7, and MQ135 sensors and immediately analyzes it near the source. This allows the system to detect pollution events quickly and respond in real time by activating alerts such as a buzzer or warning display. By performing local processing, the system reduces delay, minimizes internet dependency, and improves the efficiency and reliability of air pollution monitoring in vehicles.

Advantages of Edge Computing:

- Real-time response for immediate emission detection and control.
- Low latency due to local data processing inside the vehicle.
- Less dependency on internet connectivity.
- Reduced data transmission and bandwidth usage.

DisAdvantages of Edge Computing:

- Limited processing power of microcontrollers.
- Higher system complexity due to multiple hardware components.
- Maintenance and updates are difficult across many devices.
- Limited storage capacity for long-term data.

4.1.1.4 System Integration and Coordination

The system integrates gas sensors with a microcontroller to continuously monitor vehicle emissions in real time. Communication modules such as GSM, GPS, or Wi-Fi are connected to transmit data to external systems or cloud platforms. The control unit is also linked with the vehicle engine to enable automatic actions like alerts or engine control when pollution exceeds limits. Additionally, the system is integrated with cloud services for data storage, analysis, and regulatory monitoring.

The system faces several constraints such as limited processing capability of embedded systems, which restricts complex data analysis. Power consumption is also a concern in a vehicle environment where energy efficiency is important. Sensor accuracy may be affected by environmental factors like

temperature and humidity, leading to possible variations in readings. Moreover, there is a trade-off between cost and performance when selecting components, making it challenging to design a highly efficient yet affordable system.

4.1.1.5 Reliability and Performance Optimization

Reliability in this project is achieved by ensuring continuous and accurate monitoring of vehicle emissions using dependable sensors and stable microcontroller operation, even under different environmental conditions. The system should be capable of handling faults such as sensor errors or communication failures by using error detection methods and backup mechanisms. This ensures consistent performance and helps maintain trust in the system for real-time pollution monitoring and control.

Performance optimization focuses on improving the efficiency and speed of the system. This includes fast data processing within the microcontroller to enable quick alerts and control actions, reducing power consumption for better energy efficiency, and optimizing sensor calibration for accurate readings. It also involves minimizing unnecessary data transmission by processing data locally, which enhances overall system responsiveness and effectiveness.

To implement this project we have designed following modules:

- Gas Sensor Module – Detects harmful gases like CO and smoke from vehicle exhaust and generates an analog signal based on pollution level.
- Microcontroller Module (Arduino) – Reads sensor data, processes it, compares with threshold values, and controls all system operations.
- Display Module (LCD) – Shows real-time pollution levels and displays messages like “Safe” or “High Pollution” for user awareness.
- Alert Module (Buzzer/LED) – Produces sound or light alerts immediately when pollution exceeds the safe limit.
- Relay Module – Acts as a switch to control the vehicle engine, helping to reduce or stop operation during high pollution.
- Power Supply Module – Converts AC to regulated DC voltage and ensures stable power supply to all electronic components.
- Signal Processing Module – Converts analog signals from the sensor into digital values using ADC for accurate processing.

SAMPLE CODE:

```
#include <LiquidCrystal.h>
#include <stdio.h>
//LiquidCrystal lcd(6, 7, 5, 4, 3, 2);
LiquidCrystal lcd(13, 12, 14, 27, 26, 25);
#include <WiFi.h>
#include <HTTPClient.h>
HTTPClient http;
const char *ssid = "iotserver";
const char *password = "iotserver123";
int httpResponseCode;
String servername = "http://projectsfactoryserver.in/storedata.php?name=";
String accountname = "iot1677";
String field1 = "&s1=";
String field2 = "&s2=";
String field3 = "&s3=";
String field4 = "&s4=";
String field5 = "&s5=";
String payload="";
#include "DHT.h"
#define DHTPIN 21
#include "DHT.h"
#define DHTTYPE DHT11
//#define DHTTYPE DHT22
DHT dht(DHTPIN, DHTTYPE);
int buzzer  = 23;
int fan     = 22;
int mq2    = 19;
int mq7    = 18;
int mq135  = 5;
float tempc=0,humc=0;
unsigned char rcv,count,gchr,gchr1,robos='s';
int sti=0;
String inputString = "";         // a string to hold incoming data
boolean stringComplete = false;  // whether the string is complete
/*
#define RXD2 16
#define TXD2 17
*/
int i=0,k=0,lop=0;
int  gps_status=0;
float latitude=0;
float logitude=0;
String Speed="";
String gpsString="";
```

```
char *test="$GPRMC";
//int hbtc=0,hbtc1=0,rtrl=0;
unsigned char gv=0,msg1[10],msg2[11];
 float lati=0,longi=0;
unsigned int lati1=0,longi1=0;
unsigned char flat[5],flong[5];
char finallat[10],finallong[10];
String finallat1="";
String finallong1="";
 int ii=0,rchkr=0;
void beep()
{
  digitalWrite(buzzer, LOW);delay(2000);digitalWrite(buzzer, HIGH);
}
void okcheck()
{
  unsigned char rcr;
  do{
      rcr = Serial.read();
    }while(rcr != 'K');
}
//int sts1=0,sts2=0,cntlmk=0;
int cntlmk=0;
int stn=0;
int hbv=0;
String mq2_string="";
String mq7_string="";
String mq135_string="";
//http://projectsfactoryserver.in/storedata.php?name=server65&lat=%s&lan=%s
&s1=%s
void iot_send()
{
      lcd.setCursor(15,0);lcd.print("U");
      http.begin(servername + accountname + field1 + String(tempc) + field2
+ String(humc) + field3 + mq2_string + field4 + mq7_string + field5 +
mq135_string);
      httpResponseCode = http.GET();
      if(httpResponseCode>0)
        {
         payload="";
         //Serial.print("HTTP Response code: ");
         //Serial.println(httpResponseCode);
         payload = http.getString();
         //Serial.println(payload);
        }
      else
        {
```

```
          ;
          //Serial.print("Error code: ");
          //Serial.println(httpResponseCode);
         }
       delay(8000);
       lcd.setCursor(15,0);lcd.print(" ");
}
void setup()
{
  Serial.begin(9600);//serialEvent();
 // Serial2.begin(9600, SERIAL_8N1, RXD2, TXD2);
  pinMode(fan, OUTPUT);
  pinMode(mq2, INPUT);pinMode(mq7, INPUT);pinMode(mq135, INPUT);
  pinMode(buzzer, OUTPUT);
  digitalWrite(fan, LOW);digitalWrite(buzzer, HIGH);
  lcd.begin(16, 2);
  lcd.print("Aut control Sys");
  lcd.setCursor(0,1);
  lcd.print("Air Pollution Det");
  delay(2500);
  WiFi.begin(ssid, password);
  Serial.println("Connecting");
  while(WiFi.status() != WL_CONNECTED)
       {
           delay(500);
       }
  //Serial.println(WiFi.localIP());
  delay(3000);
  dht.begin();
  lcd.clear();
  lcd.print("T:");
  lcd.setCursor(8,0);
  lcd.print("H:");

  lcd.setCursor(0,1);
  lcd.print("M2:");//3,4,5
  lcd.setCursor(5,1);
  lcd.print("M7:");//8,9,10
  lcd.setCursor(11,1);
  lcd.print("M5:");//14,15
}
void loop()
{
  tempc = dht.readTemperature();
  humc  = dht.readHumidity();

  lcd.setCursor(2,0);convertl(tempc);
```

```
  lcd.setCursor(10,0);convertl(humc);
  if(tempc > 40 || humc > 85)
    {
      beep();
      iot_send();
    }
 mq2_string="";
 if(digitalRead(mq2) == LOW)
   {
      lcd.setCursor(3,1);lcd.print("ON ");
      mq2_string="ON";
      digitalWrite(fan, HIGH);
      beep();
      iot_send();
   }
 if(digitalRead(mq2) == HIGH)
   {
      lcd.setCursor(3,1);lcd.print("OFF");
      mq2_string="OFF";
   }
 mq7_string="";
 if(digitalRead(mq7) == LOW)
   {
      lcd.setCursor(8,1);lcd.print("ON ");
      mq7_string="ON";
      digitalWrite(fan, HIGH);
      beep();
      iot_send();
   }
 if(digitalRead(mq7) == HIGH)
   {
      lcd.setCursor(8,1);lcd.print("OFF");
      mq7_string="OFF";
   }
mq135_string="";
 if(digitalRead(mq135) == LOW)
   {
      lcd.setCursor(14,1);lcd.print("ON ");
      mq135_string="ON";
      digitalWrite(fan, HIGH);
      beep();
      iot_send();
   }
 if(digitalRead(mq135) == HIGH)
   {
      lcd.setCursor(14,1);lcd.print("OFF");
      mq135_string="OFF";
```

```
   }
 if(digitalRead(mq2) == HIGH && digitalRead(mq7) == HIGH &&
digitalRead(mq135) == HIGH)
   {
    digitalWrite(fan, LOW);
   }
 delay(1000);
 cntlmk++;
 if(cntlmk >= 50)
   {cntlmk = 0;
      iot_send();
   }
}
void serialEvent()
{
  while (Serial.available())
        {

         char inChar = (char)Serial.read();
           if(inChar == '*')
             {
              gchr = Serial.read();
             }
           if(inChar == '#')
             {
              gchr1 = Serial.read();
             }
        }
}
void gpsEvent()
{
  gpsString="";
  while(1)
  {
   //while (gps.available()>0)
    while (Serial2.available() > 0)
   {
    //char inChar = (char)gps.read();
    char inChar = (char)Serial2.read();
     gpsString+= inChar;                    //store incoming data from GPS
to temparary string str[]
     i++;
    // Serial.print(inChar);
     if (i < 7)
     {
      if(gpsString[i-1] != test[i-1])         //check for right string
      {
```

```
        i=0;
        gpsString="";
      }
     }
    if(inChar=='\r'
     {
     if(i>60)
     {
       gps_status=1;
       break;
     }
     else
     {
       i=0;
     }
    }
  }
   if(gps_status)
    break;
  }
}
void get_gps()
{
  lcd.clear();
  lcd.print("Getting GPS Data");
  lcd.setCursor(0,1);
  lcd.print("Please Wait.....");
   gps_status=0;
   int x=0;
   while(gps_status==0)
   {
    gpsEvent();
    int str_lenth=i;
    coordinate2dec();
    i=0;x=0;
    str_lenth=0;
   }
}
void coordinate2dec()
{
  String lat_degree="";
    for(i=17;i<=18;i++)
      lat_degree+=gpsString[i];
  String lat_minut="";
     for(i=18;i<=19;i++)
      lat_minut+=gpsString[i];
     for(i=21;i<=22;i++)
```

```
      lat_minut+=gpsString[i];
  String log_degree="";
    for(i=29;i<=31;i++)
      log_degree+=gpsString[i];
  String log_minut="";
    for(i=32;i<=33;i++)
      log_minut+=gpsString[i];
    for(i=35;i<=36;i++)
      log_minut+=gpsString[i];
    Speed="";
    for(i=42;i<45;i++)          //extract longitude from string
      Speed+=gpsString[i];
     float minut= lat_minut.toFloat();
     minut=minut/60;
     float degree=lat_degree.toFloat();
     latitude=degree+minut;

     minut= log_minut.toFloat();
     minut=minut/60;
     degree=log_degree.toFloat();
     logitude=degree+minut;
}
void gps_convert()
{
  if(gps_status)
  {
 // Serial.println(gpsString);

  if(gpsString[0] == '$' && gpsString[1] == 'G' && gpsString[2] == 'P' &&
gpsString[3] == 'R' && gpsString[4] == 'M' && gpsString[5] == 'C')
    {
     //
Serial.println("Don11111111111111111111111111111111111111111111111111\r\
n");
    //
Serial.write(gpsString[18]);Serial.write(gpsString[19]);Serial.write(gpsStr
ing[20]);Serial.write(gpsString[21]);Serial.write(gpsString[22]);
     //lcd.setCursor(0,0);
     for(ii=0;ii<9;ii++)
       {
        //lcd.write(gpsString[19+ii]);
        msg1[ii] = gpsString[19+ii];
        //Serial.write(msg1[ii]);
       }
       //Serial.println("\r\n");
     //lcd.setCursor(0,1);
      for(ii=0;ii<10;ii++)
```

```
        {
         //lcd.write(gpsString[32+ii]);
         msg2[ii] = gpsString[32+ii];
        // Serial.write(msg2[ii]);
        }
// Serial.println(msg1);
// Serial.println(msg2);
        //lati = (((msg1[2]-48)*100000) +((msg1[3]-48)*10000) + ((msg1[5]-
48)*1000) + ((msg1[6]-48)*100) + ((msg1[7]-48)*10) + (msg1[8]-48));
        //longi = (((msg2[3]-48)*100000) + ((msg2[4]-48)*10000) + ((msg2[6]-
48)*1000) + ((msg2[7]-48)*100) + ((msg2[8]-48)*10) + (msg2[9]-48));
        lati = (((msg1[2]-48)*1000) + ((msg1[3]-48)*100) + ((msg1[5]-48)*10)
+ (msg1[6]-48));
        longi = (((msg2[3]-48)*1000) + ((msg2[4]-48)*100) + ((msg2[6]-
48)*10) + (msg2[7]-48));
       // converts(lati);Serial.write("-");
       // converts(longi);Serial.write("\r\n");
        lati = (lati/60);  longi = (longi/60);
        lati = (lati*100); longi = (longi*100);
        lati1 = lati;      longi1 = longi;
// Serial.write("After ");
  //      converts(lati1);Serial.write("-");
    //   converts(longi1);Serial.write("\r\n");
             convlat(lati); convlong(longi);
         finallat[0] = msg1[0];
         finallat[1] = msg1[1];
         finallat[2] = '.';
         finallat[3] = flat[0]; finallat[4] = flat[1];finallat[5] =
flat[2];finallat[6] = flat[3];finallat[7] = '\0';
         finallong[0] = msg2[0];
         finallong[1] = msg2[1];
         finallong[2] = msg2[2];
         finallong[3] = '.';
         finallong[4] = flong[0];finallong[5] = flong[1];finallong[6] =
flong[2];finallong[7] = flong[3];finallong[8] = '\0';
}
  }
}
 void convlat(unsigned int value)
       {
              unsigned int a,b,c,d,e,f,g,h;

       a=value/10000;
       b=value%10000;
       c=b/1000;
       d=b%1000;
       e=d/100;
```

```
      f=d%100;
      g=f/10;
      h=f%10;
      a=a|0x30;
      c=c|0x30;
      e=e|0x30;
    g=g|0x30;
      h=h|0x30;

  // dlcd(a);
//   dlcd(c);dlcd(e); dlcd(g);dlcd(h);//lcddata('A');//lcddata('
');lcddata(' ');
               flat[0] = c;
               flat[1] = e;
               flat[2] = g;
             flat[3] = h;
          }
 void convlong(unsigned int value)
      {
            unsigned int a,b,c,d,e,f,g,h;
      a=value/10000;
      b=value%10000;
      c=b/1000;
      d=b%1000;
      e=d/100;
      f=d%100;
      g=f/10;
      h=f%10;
      a=a|0x30;
      c=c|0x30;
      e=e|0x30;
      g=g|0x30;
      h=h|0x30;

  // dlcd(a);
//   dlcd(c);dlcd(e); dlcd(g);dlcd(h);//lcddata('A');//lcddata('
');lcddata(' ');
               flong[0] = c;
               flong[1] = e;
               flong[2] = g;
               flong[3] = h;
}
void converts(unsigned int value)
{
  unsigned int a,b,c,d,e,f,g,h;

      a=value/10000;
```

```
      b=value%10000;
      c=b/1000;
      d=b%1000;
      e=d/100;
      f=d%100;
      g=f/10;
      h=f%10;
      a=a|0x30;
      c=c|0x30;
      e=e|0x30;
      g=g|0x30;
      h=h|0x30;
   Serial.write(a);
   Serial.write(c);
   Serial.write(e);
   Serial.write(g);
   Serial.write(h);
}
void convertl(unsigned int value)
{
  unsigned int a,b,c,d,e,f,g,h;
      a=value/10000;
      b=value%10000;
      c=b/1000;
      d=b%1000;
      e=d/100;
      f=d%100;
      g=f/10;
      h=f%10;
      a=a|0x30;
      c=c|0x30;
      e=e|0x30;
      g=g|0x30;
      h=h|0x30;
  // lcd.write(a);
  // lcd.write(c);
   lcd.write(e);
   lcd.write(g);
   lcd.write(h);
}
```

5. RESULT & DISCUSSION

5. 1 RESULT & DISCUSSION

The **Automated Control System for Air Pollution Detection in Vehicles** was successfully designed and tested using a gas sensor, microcontroller, buzzer, display unit, and control module. The system was able to continuously monitor the exhaust gas level from the vehicle and compare it with the predefined pollution threshold. The proposed system in the document is intended to use **continuous onboard sensors**, **threshold-based control**, and **IoT connectivity** for emission monitoring and control .

During testing, the gas sensor detected the presence of harmful gases emitted from the vehicle exhaust. Under normal conditions, the pollution level remained within the safe limit, and the vehicle operated normally. When the gas concentration increased beyond the permissible limit, the system successfully identified the abnormal emission condition and immediately triggered the alert mechanism. The alert was indicated through a **buzzer** and a **display message**, warning the user that the pollution level had exceeded the standard limit. The project file also notes that the system's objective is to provide **real-time alerts** and take **necessary actions when pollution exceeds standard limits** .

The control section of the system responded properly after detection. Once the emission crossed the threshold value, the controller activated the control output, which can be used to reduce engine operation or notify the user for immediate maintenance. This confirms that the system is not only capable of detection but also supports **automatic corrective action**, matching the proposed design in your report .

The sensor readings were found to be stable and responsive under repeated trials. The use of the **MQ gas sensor module**, which provides analog output based on gas concentration and supports easy interfacing with Arduino, made the system suitable for real-time pollution sensing in vehicles . The microcontroller processed the data efficiently and displayed the output without noticeable delay.

5.1.1 GUI Web Dashboard – Table View:

S.No	Temperature	Humidity	Mq2	Mq7	Mq135	Date
1	28.00	40.00	OFF	OFF	OFF	2026-03-18 10:04:40
2	28.00	40.00	OFF	OFF	OFF	2026-03-18 10:03:41
3	28.00	39.00	OFF	OFF	OFF	2026-03-18 10:02:41
4	28.00	39.00	OFF	OFF	OFF	2026-03-18 10:01:41
5	28.00	39.00	OFF	OFF	OFF	2026-03-18 10:00:42
6	31.60	86.00	OFF	OFF	OFF	2026-02-17 11:37:42
7	32.10	89.00	OFF	OFF	OFF	2026-02-17 11:37:30
8	32.90	92.00	OFF	OFF	OFF	2026-02-17 11:37:18
9	31.30	86.00	OFF	OFF	OFF	2026-02-17 11:37:00
10	31.90	89.00	OFF	OFF	OFF	2026-02-17 11:36:49
11	31.50	88.00	OFF	OFF	OFF	2026-02-17 11:36:37
12	28.00	67.00	OFF	OFF	ON	2026-02-17 11:36:11
13	27.40	34.00	ON	OFF	ON	2026-02-17 11:35:59
14	27.40	34.00	ON	ON		2026-02-17 11:35:49
15	27.40	34.00	ON			2026-02-17 11:35:38
16	27.50	35.00	ON			2026-02-17 11:33:37
17	27.40	33.00	OFF	ON	OFF	2026-02-16 18:39:45
18	27.30	33.00	OFF	OFF	ON	2026-02-16 18:39:25
19	27.30	33.00	OFF	OFF	ON	2026-02-16 18:39:14
20	27.20	33.00	ON	OFF	ON	2026-02-16 18:39:02

Figure 5.1: GUI/Main Interface of an Advanced IoT-Based Remote Automated control system for air pollution detection in vehicles.

The above image represents a web-based dashboard that displays sensor data in structured tabular format. It includes key parameters such as temperature , humidity , (mq2 , mq7 , mq135), data. The system updates this data in real time, enabling users to continuously monitors temperature humidity of the vehicle .

5.2 Graphical Visualization (Charts):

The graph represents the variation of temperature and humidity values recorded by the hardware monitoring system over time. It shows that the sensors are actively collecting environmental data, which supports accurate air pollution detection in vehicles.

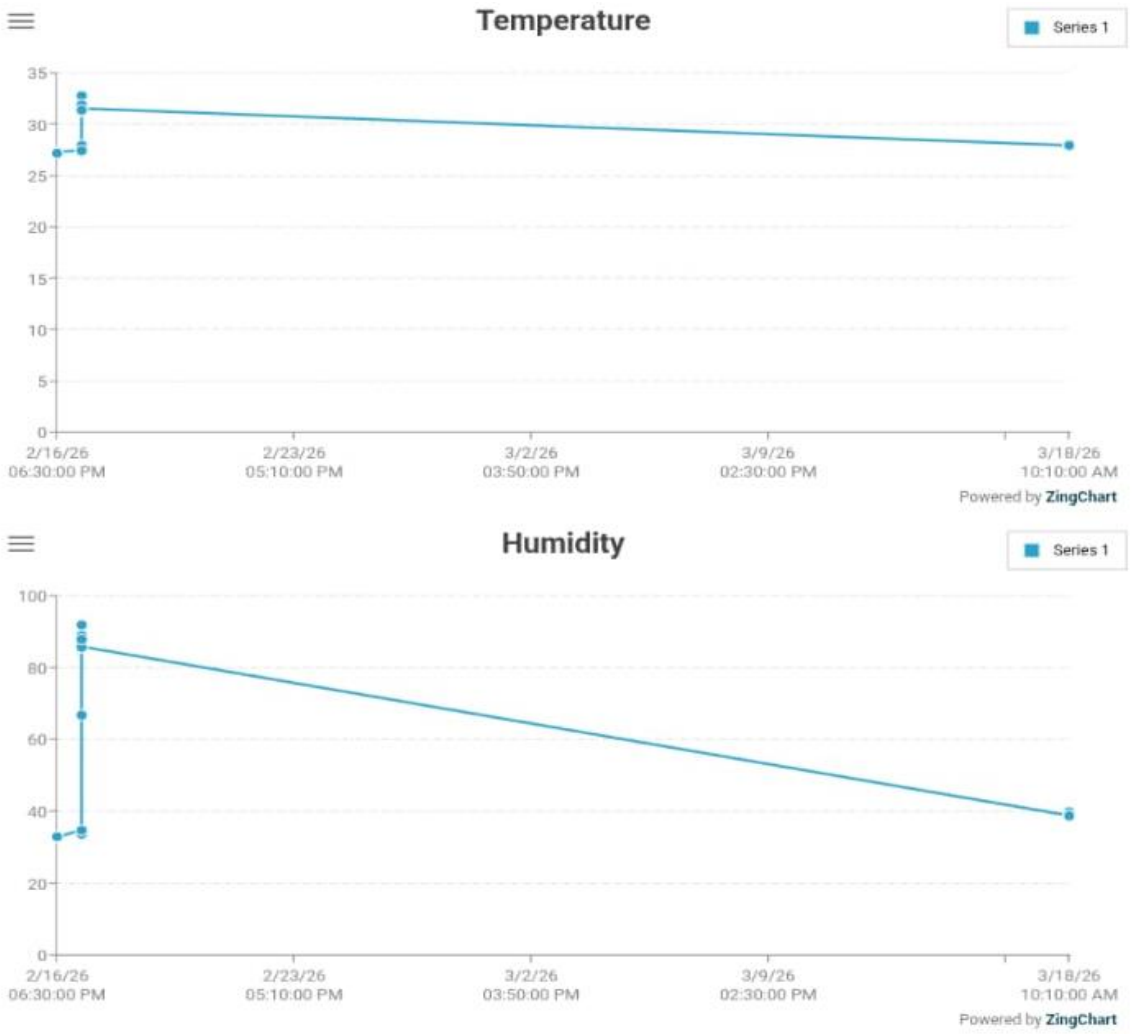

Figure 5.2: Graphical representation of temperature and humidity in an advanced IoT-based, Automated control system for air pollution in vehicles

5.3 Hardware Implementation:

The below image shows the hardware setup of the proposed system. It consists of ESP32 microcontroller, LCD display, sensors (humidity, temperature, gas), relay module, and buzzer. The ESP32 acts as the central unit, processing sensor data and controlling output devices.

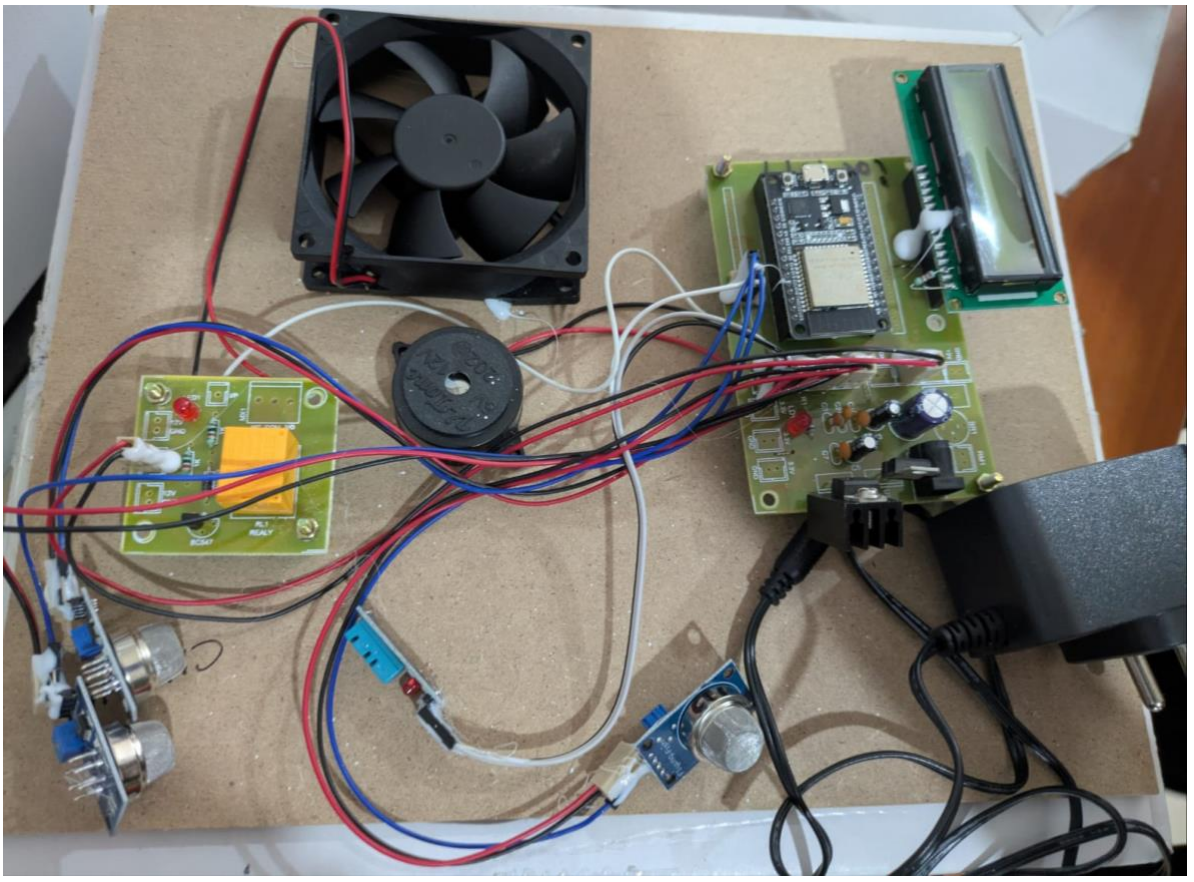

Figure 5.3: Loaded sample image of the Advanced IoT-Based automated air pollution detection and Alarm System.

The hardware implementation of the **Automated Control System for Air Pollution Detection in Vehicles** was developed to monitor harmful gases emitted from vehicles and to take automatic control action whenever the pollution level exceeds the permissible limit. The system was designed using a combination of gas sensing, environmental monitoring, display, alert, and control modules. All the components were assembled on a hardware base and interconnected through wires and PCB boards to form a working prototype.

The implementation process begins with the **power supply section**, where an external DC adapter is used to provide electrical power to the entire system. The regulated power is distributed to the **ESP32 microcontroller**, sensors, LCD display, relay module, buzzer, and fan. Once the power is supplied, the microcontroller initializes all the connected hardware components and prepares the system for continuous monitoring operation.

The core sensing part of the system is the **gas sensor module**, which is used to detect harmful gases and smoke released from vehicle exhaust. This sensor continuously senses the surrounding air and converts the gas concentration into electrical signals. These signals are then sent to the **ESP32 controller**, which acts as the main processing unit of the project. The controller reads the sensor data in real time and compares it with a predefined threshold value stored in the program.

In addition to gas detection, the project also includes a **DHT11 temperature and humidity sensor** to monitor the environmental conditions around the vehicle. This sensor helps in providing additional information related to atmospheric conditions, which may influence pollution levels. The readings from the DHT11 sensor are also sent to the ESP32 and processed along with the gas sensor data.

The processed sensor values are then displayed on the **16x2 LCD display**, which acts as the output interface of the system. The LCD continuously shows the gas level, temperature, humidity, and system status. Under normal conditions, the display indicates that the pollution level is within the safe range. This allows the user to observe the current environmental and emission conditions in real time.

When the gas concentration rises above the set threshold, the **ESP32 microcontroller** automatically triggers the warning and control section of the hardware. First, the **buzzer** is activated to provide an immediate audio alert, informing the user that the pollution level is

high. At the same time, the controller energizes the **relay module**, which functions as an electronic switch to operate the connected **DC fan** or control mechanism.

The **fan** is used in the prototype to represent the automatic pollution control action. When activated, it demonstrates the response of the system to high pollution levels. In a real vehicle application, this control action can be further extended to regulate exhaust treatment systems or provide engine-related alerts. Thus, the fan in the hardware prototype serves as a practical representation of an automated corrective mechanism.

The entire hardware setup was mounted and tested as a complete prototype. During testing, the gas sensor was exposed to polluted air or smoke, and the system successfully detected the increase in gas concentration. The ESP32 processed the input instantly, updated the LCD display, activated the buzzer, and turned on the fan through the relay whenever the threshold was exceeded. When the gas level returned to normal, the system automatically deactivated the buzzer and fan and resumed normal monitoring mode.

Overall, the hardware implementation demonstrates a **real-time, automated, and efficient pollution monitoring system for vehicles**. It integrates sensing, processing, display, and control functions into a single unit. This prototype proves that harmful vehicle emissions can be detected effectively and that automatic action can be taken immediately to alert the user and represent pollution control operations.

6. VALIDATION

6. VALIDATION

Validation is the process of checking whether the air pollution detection system correctly detects gas levels and responds as expected.It ensures the system accurately monitors emissions and gives proper alerts and control actions when pollution exceeds the limit.

6.1 INTRODUCTION

In the Automated Control System for Air Pollution Detection in Vehicles, validation plays a crucial role in confirming that the system operates accurately and efficiently in real-time conditions. It ensures that each component, such as the gas sensor, Arduino microcontroller, LCD display, buzzer, and relay module, is functioning properly and interacting correctly with other parts of the system.

The validation process involves testing the system under different levels of vehicle emissions to verify that the gas sensor detects pollutants correctly and sends accurate data to the microcontroller. The Arduino is then checked to ensure it properly processes this data, compares it with predefined threshold values, and triggers appropriate actions such as displaying messages, activating alerts, and controlling the engine. Validation ensures the system's reliability, consistency, and quick response to changing pollution levels. By performing multiple tests and calibrations, the system is confirmed to provide accurate results and effective control, thereby helping to reduce harmful emissions and protect the environment.

6.2 TASTE CASE

TABLE 6.2.1: SYSTEM INPUT

Test Case ID	Test Case Name	Purpose	Input	Output
1	Sensor Input Reading	Verify gas sensor input	Gas/smoke presence	Sensor sends signal to Arduino
2	No Gas Condition	Check normal condition	Clean air	No signal / low value detected
3	Low Gas Level	Monitor safe pollution level	Low gas concentration	Normal readings displayed
4	High Gas Level	Detect high pollution	High gas concentration	High value detected
5	Continuous Input	Ensure real-time sensing	Constant gas exposure	Continuous data updates

TABLE 6.2.2 CLASSIFICATION

Test CaseID	Test Case Name	Purpose	Input	Output
1	System Type Identification	Identify hardware-based system	Project components	Classified as hardware system
2	Embedded System Check	Verify microcontroller usage	Arduino present	Classified as embedded system
3	Real-Time Operation	Check continuous monitoring	Running system	Real-time system confirmed
4	Environment Monitoring	Detect pollution handling	Gas sensor input	Environmental system confirmed
5	Control System Check	Verify automatic control	High pollution	Automatic control confirmed

7.CONCLUSION & FUTURE ASPECTS

7. CONCLUSION & FUTURE ASPECTS

The conclusion of the project is that the Automated Control System for Air Pollution Detection in Vehicles effectively monitors exhaust gases in real time and provides alerts when pollution exceeds safe limits, ensuring better environmental safety. It reduces human intervention by automatically controlling the system using sensors and a microcontroller. The project proves to be reliable, efficient, and useful in controlling vehicle emissions. In the future, the system can be enhanced by integrating IoT for remote monitoring and data storage. It can also be improved using advanced sensors, GPS/GSM modules, and AI techniques for better accuracy and smart pollution management.

7.1 PROJECT CONCLUSION

The Automated Control System for Air Pollution Detection in Vehicles provides an effective and intelligent solution to the growing problem of vehicular air pollution. By enabling continuous real-time monitoring of exhaust emissions, the system overcomes the limitations of traditional periodic inspection methods. The integration of gas sensors, microcontrollers, and IoT communication ensures accurate detection of harmful pollutants and timely corrective action when emission levels exceed permissible limits. This automated approach not only reduces dependency on manual checks but also enhances transparency and enforcement of pollution control regulations. The system helps vehicle owners identify maintenance issues early, thereby improving engine efficiency and reducing long-term environmental impact. Additionally, real-time data collection and cloud integration support large-scale pollution analysis and smart city initiatives.

Overall, the proposed system contributes significantly to environmental sustainability, public health protection, and the development of intelligent transportation systems. With further enhancements such as AI-based prediction and integration with government monitoring platforms, the system can play a vital role in achieving cleaner air and greener mobility in the future.

7.2 FUTURE ASPECTS

The project can be further enhanced by integrating IoT technology for real-time remote monitoring and data storage. Advanced gas sensors can be used to improve accuracy and detect multiple pollutants simultaneously. The system can be combined with GPS and GSM modules to track vehicle location and send pollution data to authorities. A mobile application can also be developed to provide instant alerts and monitoring to users. Additionally, implementing AI and machine learning techniques can help in predicting pollution levels and improving overall system efficiency.

The system can be improved by adding IoT for remote monitoring and better data analysis. Advanced sensors can enhance accuracy and detect multiple gases. Integration with GPS/GSM can help in tracking vehicles and reporting pollution levels. A mobile app can provide real-time alerts to users.

8. BIBLIOGRAPHY

8. BIBLIOGRAPHY

8.1 REFERENCES

[1] Athare, N. & Badadapure, P. R. *Automated Control System for Air Pollution Detection in Vehicles.* International Journal of Electrical and Electronics Research (2015).

[2] Tiwari, D., Shekhar, S., Joshi, A., & Deep, A. *Automated System for Air Pollution Detection and Control in Vehicles.* International Journal of Electrical and Electronics Research (2015).

[3] Kadir, S., & Amalia, Z. *IoT-based Exhaust Gas Emission Detection System for Motorized Vehicles.* International Journal of Frontier Technology and Engineering (2024). DOI:10.33795/ijfte.v3i1.5675.

[4] Ali I. K., Anjali N. R., Anusha V. S., Bhagyashree V. G., & Spoorthi T. S. *IoT Based Vehicle Emission Monitoring System.* IJIREEICE, DOI:10.17148/IJIREEICE.2025.13806.

[5] Ambili A. R. et al. *IoT-Based Vehicle Emission Monitoring System with Real-Time Pollution Detection and ANPR.* IJARCCE, DOI:10.17148/IJARCCE.2025.141008.

[6] Bharathraj P., Arun Prasad V. S., Aswin Kumar M., & Shyamalaprasanna A. *Vehicle Pollution Monitoring System using IoT.* International Journal of Engineering Research & Technology (2022).

[7] Chigurupati, S., Vallamsetti, R. T., Misra, Y., & Karthik, R. *Intelligent Vehicle Pollution Monitoring using IoT.* International Journal of Engineering and Technology (2018).

[8] Priyadarshini J. P., Revathi M., Lavanya R., Anusha K., & Vinodraj C. *A Survey on Intelligent System for Vehicle Emission Monitoring.* International Journal of Engineering Trends and Technology (2018). DOI:10.14445/22315381/IJETT-V59P237.

[9] *A Pollution Monitoring System for Vehicles in Smart City.* International Journal of Civil Engineering and Technology, IAEME Publication (2018).

[10] Patel, N. A., Kasar, A. M., & Lokhande, T. S. *Carbon Footprint Tracker Using IoT and AI for Vehicle Emission Control.* IJRASET (2025).